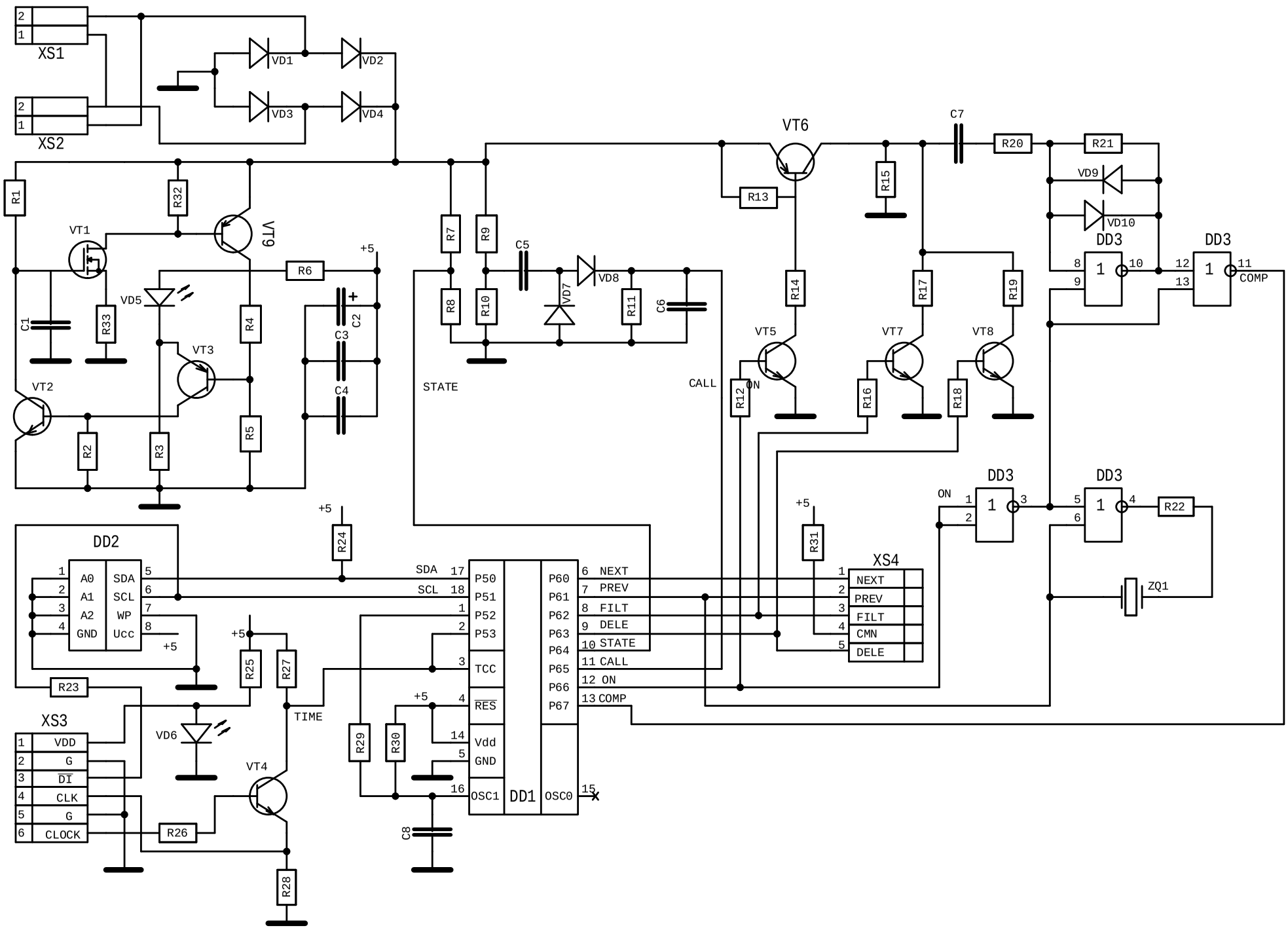
XS1
XS2
VD1
VD2
VD3
VD4
R1
R32
VT1
VT9
R6
+5
VD5
R33
C1
R4
VT3
VT2
R2
R3
R5
C2
C3
C4
R7
R9
R8
R10
C5
VD7
VD8
R11
C6
STATE
CALL
VT6
R13
R15
C7
R20
R21
VD9
VD10
DD3
R14
R17
R19
VT5
VT7
VT8
R12
ON
R16
R18
COMP
R22
ZQ1
R31
XS4
NEXT
PREV
FILT
CMN
DELE
DD2
A0
A1
A2
GND
SDA
SCL
WP
Ucc
R24
R25
R27
R23
XS3
VDD
G
DI
CLK
CLOCK
VD6
VT4
R26
R28
TIME
R29
R30
C8
P50
P51
P52
P53
TCC
RES
Vdd
OSC1
DD1
OSC0
P60
P61
P62
P63
P64
P65
P66
P67
NEXT
PREV
FILT
DELE
STATE
CALL
ON
COMP